ELECTRIC ARTICULATING BOOM LIFTS

AB10ERJN(AB320ERJN)

Compliant with CE/ANSI/CSA/EAC standards

www.sinoboom.eu

PRODUCT HIGHLIGHTS

Electric Control System

- Equipped with Sinoboom standard Rexroth controllers, compliant with EN ISO 13849 Performance Level d
- Standard emergency ground and platform control
- Intuitive control system

5 Inch LED Screen

- Excellent human machine interface experience with a 5 inch LED screen, and one button for fault diagnosis on the screen, No manual or tools required

Compact Design

- With only 1.19m(3'11") narrow chassis and 1.99m(6'6") stowed height, zero tailswing, suitable for working in confined spaces

Automatic Pothole Guard

- Provides enough ground clearance for loading and unloading
- System deploys when elevated, providing additional operator safety



Standard Features		
Hydraulic platform leveling	Automotive-grade sleeves for all pipes	Automatic pothole guard
Proportional control	Electrical Emergency lowering system	5 inch LED screen
Manual storage box	Weighing system	2WD × 2WS
Footswitch	Emergency stop system	Tilt rating up to 3°
Horn & buzzer	Fault diagnosis system	Platform & jib rotation 180°
Motion alarm	Tilt protection system	Solid non-marking tires
Flashing beacon	Telematics-ready connector	AGM battery
AC power to platform cable	Secondary guarding device	
Options & Accessories		
Platform with swing entry gate	Platform work light	White noise alarm

SINOBOOM™

PARTNERS IN ACCESS™

SINOBOOM.EU | INFO@SINOBOOM.EU | +31 180 225 666

NIKKELSTRAAT 26, 2984 AM RIDDERKERK THE NETHERLANDS

ELECTRIC ARTICULATING BOOM LIFTS

AB10ERJN(AB320ERJN)

Compliant with CE/ANSI/CSA/EAC standards

Model	AB10ERJN(AB320ERJN)
Dimensions	
Max Platform Height	9.62 m (31'7")
Max Working Height	11.62 m (38'1")
Max Horizontal Outreach	6.3 m (20'8")
Max Up and Over Clearance	4.63 m (15'2")
A Stowed Length	5.84 m (19'2")
B Overall Width	1.19 m (3'11")
C Stowed Height	1.99 m (6'6")
Transport Length	4.25 m (13'11")
Transport Width	1.19 m (3'11")
Transport Height	2.70 m (8'10")
D Wheelbase	1.65 m (5'5")
Ground Clearance (Pothole Guard Stowed/Deployed)	0.09 m/0.03 m (3"/1.1")
Platform Size (L×W×H)	1.15 m×0.76 m×1.1 m (45.3"×30"×43.3")
Performance	
Max Platform Capacity	230 kg (507 lbs)
Max Platform Occupants	2 persons
Drive Speed (Stowed)	5 km/h (3.1 mph)
Drive Speed (Raised)	0.8 km/h (0.5 mph)
Gradeability	35%
Turntable Rotation	355 °non-continuous
Jib Length	1.42 m (4'8")
Platform Rotation	180°
Horizontal Jib Rotation	180°
Vertical Jib Rotation	136° (Up +64° Down -72°)
Tilt Rating	3°
Turning Radius (Inside/Outside)	1.7 m/3.25 m (5'7"/10'8")
Turntable Tail-swing	0 m
Max Allowable Side Force	400 N (90 lbf)
Max Allowable Wind Speed	12.5 m/s (28 mph)
Tire Spec/Type	22×7×17.75'' (Solid non-marking)
Power	
Drive×Steer	2 WD × 2 WS
Batteries	48 V , 330 Ah (AGM battery)
Hydraulic Tank Capacity	20 L (4.4 gal(UK)/5.3 gal(US))
System Voltage	12 V DC
Weight	
Weight	6,760 kg (14,903 lbs)
Standards Compliance	CE/ANSI/CSA/EAC

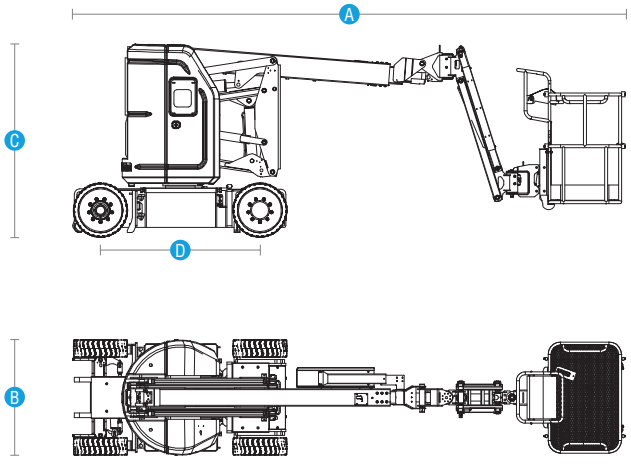

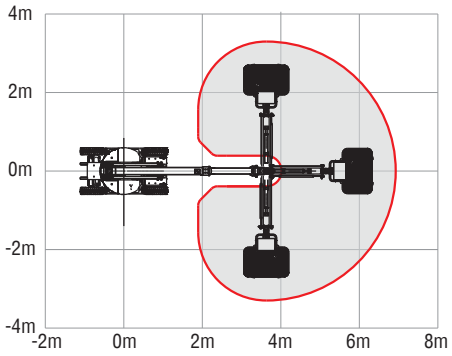

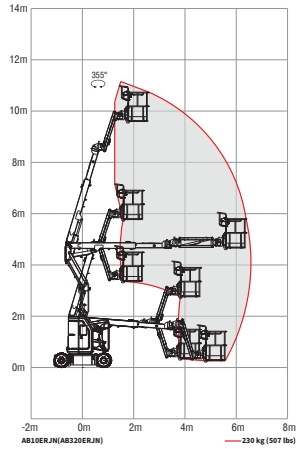

We reserve the right to make specification. The above represents the current specifications at time of publications. 12. 2023

SINOBOOM

PARTNERS IN ACCESS™

SINOBOOM.EU | INFO@SINOBOOM.EU | +31 180 225 666

Nikkelstraat 26, 2984 AM Ridderkerk, The Netherlands